	SM700TP-SVP/2		J1	J2	K1	K2	N1	N2	P1	P2	Q1	Q2	A1	A2	R1	R2	B1	B2	C1	C2	D1	D2	E1	E2	F1	F2	G1	G2	H
Injection Unit	Shot Weight(PS)	g	1,968	2,314	2,604	3,087	3,430	4,322	4,754	5,658	6,172	7,244	7,847	9,101	9,801	11,251	13,180	17,939	21,002	27,431	31,431	39,780	44,843	55,362	61,166	74,011	81,034	96,437	106,081
	Swept Volume	cm³	2,163	2,543	2,861	3,393	3,770	4,749	5,224	6,217	6,782	7,960	8,623	10,001	10,770	12,364	14,483	19,713	23,079	30,144	34,540	43,715	49,278	60,838	67,216	81,331	89,048	105,975	116,573
	Screw Diameter	mm	83	90	90	98	98	110	110	120	120	130	130	140	140	150	150	175	175	200	200	225	225	250	250	275	275	300	300
	Injection Pressure(Max.)	Mpa	187	159	184	155	184	146	184	155	184	157	180	155	180	157	180	132	160	123	160	126	160	130	160	132	160	134	160
	Injection Stroke	mm	400		450		500		550		600		650		700		820		960		1,100		1,240		1,370		1,500		1,650
	Screw Rotation Speed (Max.)	rpm	150		140		130		115		110		100		95		95	80	83	69	65	50	60	50	60	47	50	40	40
	Injection Rate	cm³/s	560	658	650	771	720	907	825	982	952	1,117	1,136	1,317	1,296	1,488	1,296	1,764	1,970	2,339	2,122	2,686	2,722	3,360	3,307	4,001	3,268	3,889	2,517
	Screw L/D Ratio		22.0	20.3	22.0	20.2	22.0	19.6	22.0	20.2	22.0	20.3	22.0	20.4	22.0	20.5	22.0	18.9	22.0	19.3	22.0	19.6	22.0	19.8	22.0	20.0	22.0	20.2	22.0
	Nozzle Contact Force	ton	15																										
Clamping Unit	Clamping Force(Max.)	ton	700																										
	Opening Force	ton	70																										
	Opening Stroke	mm	1,200-1,900																										
	Space Between Tie Bar(HxV)	mm	1,020 x 1,020																										
	Mould Thickness(Min.-Max.)	mm	400-1,100																										
	Maximum Daylight	mm	2300																										
	Clamp Closing Speed(Max.)	m/min	45																										
	Clamp Opening Speed(Max.)	m/min	45																										
	Ejector Force(Max.)	ton	22																										
	Ejector Stroke	mm	280																										
	Mould Register Hole	mm	250																										
Power/Heating Unit	System Pressure	kgf/cm²	175																										
	Servo Motor Power	kW	75		85		93		104.5		124.5		142.5		159.5		159.5		195		240		285		375		520		600
	Electrial Heating Power	kW	38		42		48		50		70		80		95		100		130		175		220		270		330		390
	Temperature Heating Zone																		7										
	Oil Tank Capacity	L	1,650		1,700		1,750		2,250		2,350		2,700		3,300		3,850		4,150		5,950		7,400		8,650		11,000		12,500
Others	Machine Dimensions(LxWxH)	m	9.2x2.9x2.5		9.3x2.9x2.5		9.4x2.9x2.5		10.2x2.9x2.5		10.9x2.9x2.5		11.0x2.9x2.5		11.3x2.9x2.5		11.3x2.9x2.5		12.4x2.9x2.5		13.2x2.9x2.5		14.8x2.9x2.5		16.2x2.9x2.5		18.6x2.9x2.5		10.6x2.9x2.5
	Machine Weight(Approx.)	ton	28		30		32		35		38		40		42		47		55		60		70		80		90		100

	SM850TP-SVP/2		J1	J2	K1	K2	N1	N2	P1	P2	Q1	Q2	A1	A2	R1	R2	B1	B2	C1	C2	D1	D2	E1	E2	F1	F2	G1	G2	H
Injection Unit	Shot Weight(PS)	g	1,968	2,314	2,604	3,087	3,430	4,322	4,754	5,658	6,172	7,244	7,847	9,101	9,801	11,251	13,180	17,939	21,002	27,431	31,431	39,780	44,843	55,362	61,166	74,011	81,034	96,437	106,081
	Swept Volume	cm³	2,163	2,543	2,861	3,393	3,770	4,749	5,224	6,217	6,782	7,960	8,623	10,001	10,770	12,364	14,483	19,713	23,079	30,144	34,540	43,715	49,278	60,838	67,216	81,331	89,048	105,975	116,573
	Screw Diameter	mm	83	90	90	98	98	110	110	120	120	130	130	140	140	150	150	175	175	200	200	225	225	250	250	275	275	300	300
	Injection Pressure(Max.)	Mpa	187	159	184	155	184	146	184	155	184	157	180	155	180	157	180	132	160	123	160	126	160	130	160	132	160	134	160
	Injection Stroke	mm	400		450		500		550		600		650		700		820		960		1,100		1,240		1,370		1,500		1,650
	Screw Rotation Speed (Max.)	rpm	150		140		130		115		110		100		95		95	80	83	69	65	50	60	50	60	47	50	40	40
	Injection Rate	cm³/s	560	658	650	771	720	907	825	982	952	1,117	1,136	1,317	1,296	1,488	1,296	1,764	1,970	2,339	2,122	2,686	2,722	3,360	3,307	4,001	3,268	3,889	2,517
	Screw L/D Ratio		22.0	20.3	22.0	20.2	22.0	19.6	22.0	20.2	22.0	20.3	22.0	20.4	22.0	20.5	22.0	18.9	22.0	19.3	22.0	19.6	22.0	19.8	22.0	20.0	22.0	20.2	22.0
	Nozzle Contact Force	ton	15																										
Clamping Unit	Clamping Force(Max.)	ton	850																										
	Opening Force	ton	85																										
	Opening Stroke	mm	1,250-2,000																										
	Space Between Tie Bar(HxV)	mm	1,170 x 1,170																										
	Mould Thickness(Min.-Max.)	mm	450-1,200																										
	Maximum Daylight	mm	2,450																										
	Clamp Closing Speed(Max.)	m/min	45																										
	Clamp Opening Speed(Max.)	m/min	45																										
	Ejector Force(Max.)	ton	22																										
	Ejector Stroke	mm	300																										
	Mould Register Hole	mm	250																										
Power/Heating Unit	System Pressure	kgf/cm²	175																										
	Servo Motor Power	kW	75		85		93		104.5		124.5		142.5		159.5		159.5		195		240		285		375		520		600
	Electrial Heating Power	kW	38		42		48		50		70		80		95		100		130		175		220		270		330		390
	Temperature Heating Zone																		7										
	Oil Tank Capacity	L	1,680		1,730		1,780		2,300		2,400		2,750		3,350		3,900		4,200		6,000		7,450		8,700		11,000		12,500
Others	Machine Dimensions(LxWxH)	m	9.6x3.1x2.7		9.7x3.1x2.7		9.8x3.1x2.7		10.6x3.1x2.7		11.2x3.1x2.7		11.3x3.1x2.7		11.7x3.1x2.7		11.7x3.1x2.7		12.7x3.1x2.7		13.6x3.1x2.7		15.1x3.1x2.7		16.5x3.1x2.7		19.0x3.1x2.7		21.0x3.1x2.7
	Machine Weight(Approx.)	ton	36		38		40		43		46		48		50		55		63		68		78		88		98		108

☐ Standard

SM1050TP-SVP/2		J1	J2	K1	K2	N1	N2	P1	P2	Q1	Q2	A1	A2	R1	R2	B1	B2	C1	C2	D1	D2	E1	E2	F1	F2	G1	G2	H
Injection Unit	Shot Weight(PS)	g	1,968	2,314	2,604	3,087	3,430	4,322	4,754	5,658	6,172	7,244	7,847	9,101	9,801	11,251	13,180	17,939	21,002	27,431	31,431	39,780	44,843	55,362	61,166	74,011	81,034	96,437	106,081
	Swept Volume	cm³	2,163	2,543	2,861	3,393	3,770	4,749	5,224	6,217	6,782	7,960	8,623	10,001	10,770	12,364	14,483	19,713	23,079	30,144	34,540	43,715	49,278	60,838	67,216	81,331	89,048	105,975	116,573
	Screw Diameter	mm	83	90	90	98	98	110	110	120	120	130	130	140	140	150	150	175	175	200	200	225	225	250	250	275	275	300	300
	Injection Pressure(Max.)	Mpa	187	159	184	155	184	146	184	155	184	157	180	155	180	157	180	132	160	123	160	126	160	130	160	132	160	134	160
	Injection Stroke	mm	400		450		500		550		600		650		700		820		960		1,100		1,240		1,370		1,500		1,650
	Screw Rotation Speed (Max.)	rpm	150		140		130		115		110		100		95		95	80	83	69	65	50	60	50	60	47	50	40	40
	Injection Rate	cm³/s	560	658	650	771	720	907	825	982	952	1,117	1,136	1,317	1,296	1,488	1,296	1,764	1,970	2,339	2,122	2,686	2,722	3,360	3,307	4,001	3,268	3,889	2,517
	Screw L/D Ratio		22.0	20.3	22.0	20.2	22.0	19.6	22.0	20.2	22.0	20.3	22.0	20.4	22.0	20.5	22.0	18.9	22.0	19.3	22.0	19.6	22.0	19.8	22.0	20.0	22.0	20.2	22.0
	Nozzle Contact Force	ton	15																										
Clamping Unit	Clamping Force(Max.)	ton	1,050																										
	Opening Force	ton	85																										
	Opening Stroke	mm	1,300-2,100																										
	Space Between Tie Bar(HxV)	mm	1,280 x 1,280																										
	Mould Thickness(Min.-Max.)	mm	500-1,300																										
	Maximum Daylight	mm	2,600																										
	Clamp Closing Speed(Max.)	m/min	45																										
	Clamp Opening Speed(Max.)	m/min	45																										
	Ejector Force(Max.)	ton	22																										
	Ejector Stroke	mm	350																										
	Mould Register Hole	mm	250																										
Power/ Heating Unit	System Pressure	kgf/cm²	175																										
	Servo Motor Power	kW	75		85		93		104.5		124.5		142.5		159.5		159.5		195		240		285		375		520		600
	Electrial Heating Power	kW	38		42		48		50		70		80		95		100		130		175		220		270		330		390
	Temperature Heating Zone		7																										
	Oil Tank Capacity	L	1,700		1,750		1,800		2,300		2,400		2,750		3,350		3,900		4,200		6,000		7,450		8,700		11,000		12,500
Others	Machine Dimensions(LxWxH)	m	9.9x3.3x2.8		10.0x3.3x2.8		10.1x3.3x2.8		10.8x3.3x2.8		11.5x3.3x2.8		11.6x3.3x2.8		12.0x3.3x2.8		12.0x3.3x2.8		13.0x3.3x2.8		13.9x3.3x2.8		15.4x3.3x2.8		16.8x3.3x2.8		19.3x3.3x2.8		21.3x3.3x2.8
	Machine Weight(Approx.)	ton	43		45		47		50		53		55		57		62		70		75		85		95		105		115

SM1250TP-SVP/2		J1	J2	K1	K2	N1	N2	P1	P2	Q1	Q2	A1	A2	R1	R2	B1	B2	C1	C2	D1	D2	E1	E2	F1	F2	G1	G2	H
Injection Unit	Shot Weight(PS)	g	1,968	2,314	2,604	3,087	3,430	4,322	4,754	5,658	6,172	7,244	7,847	9,101	9,801	11,251	13,180	17,939	21,002	27,431	31,431	39,780	44,843	55,362	61,166	74,011	81,034	96,437	106,081
	Swept Volume	cm³	2,163	2,543	2,861	3,393	3,770	4,749	5,224	6,217	6,782	7,960	8,623	10,001	10,770	12,364	14,483	19,713	23,079	30,144	34,540	43,715	49,278	60,838	67,216	81,331	89,048	105,975	116,573
	Screw Diameter	mm	83	90	90	98	98	110	110	120	120	130	130	140	140	150	150	175	175	200	200	225	225	250	250	275	275	300	300
	Injection Pressure(Max.)	Mpa	187	159	184	155	184	146	184	155	184	157	180	155	180	157	180	132	160	123	160	126	160	130	160	132	160	134	160
	Injection Stroke	mm	400		450		500		550		600		650		700		820		960		1,100		1,240		1,370		1,500		1,650
	Screw Rotation Speed (Max.)	rpm	150		140		130		115		110		100		95		95	80	83	69	65	50	60	50	60	47	50	40	40
	Injection Rate	cm³/s	560	658	650	771	720	907	825	982	952	1,117	1,136	1,317	1,296	1,488	1,296	1,764	1,970	2,339	2,122	2,686	2,722	3,360	3,307	4,001	3,268	3,889	2,517
	Screw L/D Ratio		22.0	20.3	22.0	20.2	22.0	19.6	22.0	20.2	22.0	20.3	22.0	20.4	22.0	20.5	22.0	18.9	22.0	19.3	22.0	19.6	22.0	19.8	22.0	20.0	22.0	20.2	22.0
	Nozzle Contact Force	ton	15																										
Clamping Unit	Clamping Force(Max.)	ton	1,250																										
	Opening Force	ton	125																										
	Opening Stroke	mm	1,500 - 2,300																										
	Space Between Tie Bar(HxV)	mm	1,380 X 1,280																										
	Mould Thickness(Min.-Max.)	mm	500 - 1,300																										
	Maximum Daylight	mm	2,800																										
	Clamp Closing Speed(Max.)	m/min	45																										
	Clamp Opening Speed(Max.)	m/min	45																										
	Ejector Force(Max.)	ton	22																										
	Ejector Stroke	mm	400																										
	Mould Register Hole	mm	250																										
Power/ Heating Unit	System Pressure	kgf/cm²	175																										
	Servo Motor Power	kW	75		85		93		104.5		124.5		142.5		159.5		159.5		195		240		285		375		520		600
	Electrial Heating Power	kW	38		42		48		50		70		80		95		100		130		175		220		270		330		390
	Temperature Heating Zone		7																										
	Oil Tank Capacity	L	1,730		1,780		1,830		2,300		2,400		2,750		3,350		3,900		4,200		6,000		7,450		8,700		11,000		12,500
Others	Machine Dimensions(LxWxH)	m	10.2x3.5x3		10.3x3.5x3		10.4x3.5x3		11.2x3.5x3		11.8x3.5x3		11.9x3.5x3		12.3x3.5x3		12.3x3.5x3		13.3x3.5x3		14.2x3.5x3		15.8x3.5x3		17.1x3.5x3		19.6x3.5x3		21.6x3.5x3
	Machine Weight(Approx.)	ton	45		47		49		55		58		60		62		67		75		80		90		100		110		120

*The technical parameters above are for reference only and discrepancies may arise in different circumstances. The company keeps upgrading the products and reserves the right to change the product specifications and parameters without prior notice. The final interpretation to the above specifications and parameters belongs to the company.

	SM1450TP-SVP/2		J1	J2	K1	K2	N1	N2	P1	P2	Q1	Q2	A1	A2	R1	R2	B1	B2	C1	C2	D1	D2	E1	E2	F1	F2	G1	G2	H
Injection Unit	Shot Weight(PS)	g	1,968	2,314	2,604	3,087	3,430	4,322	4,754	5,658	6,172	7,244	7,847	9,101	9,801	11,251	13,180	17,939	21,002	27,431	31,431	39,780	44,843	55,362	61,166	74,011	81,034	96,437	106,081
	Swept Volume	cm³	2,163	2,543	2,861	3,393	3,770	4,749	5,224	6,217	6,782	7,960	8,623	10,001	10,770	12,364	14,483	19,713	23,079	30,144	34,540	43,715	49,278	60,838	67,216	81,331	89,048	105,975	116,573
	Screw Diameter	mm	83	90	90	98	98	110	110	120	120	130	130	140	140	150	150	175	175	200	200	225	225	250	250	275	275	300	300
	Injection Pressure(Max.)	Mpa	187	159	184	155	184	146	184	155	184	157	180	155	180	157	180	132	160	123	160	126	160	130	160	132	160	134	160
	Injection Stroke	mm	400		450		500		550		600		650		700		820		960		1,100		1,240		1,370		1,500		1,650
	Screw Rotation Speed (Max.)	rpm	150		140		130		115		110		100		95		95	80	83	69	65	50	60	50	60	47	50	40	40
	Injection Rate	cm³/s	560	658	650	771	720	907	825	982	952	1,117	1,136	1,317	1,296	1,488	1,296	1,764	1,970	2,339	2,122	2,686	2,722	3,360	3,307	4,001	3,268	3,889	2,517
	Screw L/D Ratio		22.0	20.3	22.0	20.2	22.0	19.6	22.0	20.2	22.0	20.3	22.0	20.4	22.0	20.5	22.0	18.9	22.0	19.3	22.0	19.6	22.0	19.8	22.0	20.0	22.0	20.2	22.0
	Nozzle Contact Force	ton	15																										
Clamping Unit	Clamping Force(Max.)	ton	1,450																										
	Opening Force	ton	125																										
	Opening Stroke	mm	1,650 - 2,450																										
	Space Between Tie Bar(HxV)	mm	1,470 X 1,370																										
	Mould Thickness(Min.-Max.)	mm	550 - 1,350																										
	Maximum Daylight	mm	3,000																										
	Clamp Closing Speed(Max.)	m/min	45																										
	Clamp Opening Speed(Max.)	m/min	45																										
	Ejector Force(Max.)	ton	35																										
	Ejector Stroke	mm	400																										
	Mould Register Hole	mm	250																										
Power/Heating Unit	System Pressure	kgf/cm²	175																										
	Servo Motor Power	kW	75		85		93		104.5		124.5		142.5		159.5		159.5		195		240		285		375		520		600
	Electrial Heating Power	kW	38		42		48		50		70		80		95		100		130		175		220		270		330		390
	Temperature Heating Zone																		7										
	Oil Tank Capacity	L	1,750		1,800		1,850		2,300		2,400		2,750		3,350		3,900		4,200		6,000		7,450		8,700		11,000		12,500
Others	Machine Dimensions(LxWxH)	m	10.6x3.75x3.15		10.7x3.75x3.15		10.8x3.75x3.15		11.6x3.75x3.15		12.2x3.75x3.15		12.3x3.75x3.15		12.7x3.75x3.15		12.7x3.75x3.15		13.7x3.75x3.15		14.6x3.75x3.15		16.1x3.75x3.15		17.5x3.75x3.15		20.0x3.75x3.15		22.0x3.75x3.15
	Machine Weight(Approx.)	ton	50		52		54		60		63		65		67		70		75		82		90		100		110		120

	SM1650TP-SVP/2		J1	J2	K1	K2	N1	N2	P1	P2	Q1	Q2	A1	A2	R1	R2	B1	B2	C1	C2	D1	D2	E1	E2	F1	F2	G1	G2	H
Injection Unit	Shot Weight(PS)	g	1,968	2,314	2,604	3,087	3,430	4,322	4,754	5,658	6,172	7,244	7,847	9,101	9,801	11,251	13,180	17,939	21,002	27,431	31,431	39,780	44,843	55,362	61,166	74,011	81,034	96,437	106,081
	Swept Volume	cm³	2,163	2,543	2,861	3,393	3,770	4,749	5,224	6,217	6,782	7,960	8,623	10,001	10,770	12,364	14,483	19,713	23,079	30,144	34,540	43,715	49,278	60,838	67,216	81,331	89,048	105,975	116,573
	Screw Diameter	mm	83	90	90	98	98	110	110	120	120	130	130	140	140	150	150	175	175	200	200	225	225	250	250	275	275	300	300
	Injection Pressure(Max.)	Mpa	187	159	184	155	184	146	184	155	184	157	180	155	180	157	180	132	160	123	160	126	160	130	160	132	160	134	160
	Injection Stroke	mm	400		450		500		550		600		650		700		820		960		1,100		1,240		1,370		1,500		1,650
	Screw Rotation Speed (Max.)	rpm	150		140		130		115		110		100		95		95	80	83	69	65	50	60	50	60	47	50	40	40
	Injection Rate	cm³/s	560	658	650	771	720	907	825	982	952	1,117	1,136	1,317	1,296	1,488	1,296	1,764	1,970	2,339	2,122	2,686	2,722	3,360	3,307	4,001	3,268	3,889	2,517
	Screw L/D Ratio		22.0	20.3	22.0	20.2	22.0	19.6	22.0	20.2	22.0	20.3	22.0	20.4	22.0	20.5	22.0	18.9	22.0	19.3	22.0	19.6	22.0	19.8	22.0	20.0	22.0	20.2	22.0
	Nozzle Contact Force	ton	15																										
Clamping Unit	Clamping Force(Max.)	ton	1,650																										
	Opening Force	ton	165																										
	Opening Stroke	mm	1,700 - 2,500																										
	Space Between Tie Bar(HxV)	mm	1,570 X 1,470																										
	Mould Thickness(Min.-Max.)	mm	600 - 1,400																										
	Maximum Daylight	mm	3,100																										
	Clamp Closing Speed(Max.)	m/min	45																										
	Clamp Opening Speed(Max.)	m/min	45																										
	Ejector Force(Max.)	ton	35																										
	Ejector Stroke	mm	400																										
	Mould Register Hole	mm	315																										
Power/Heating Unit	System Pressure	kgf/cm²	175																										
	Servo Motor Power	kW	75		85		93		104.5		124.5		142.5		159.5		159.5		195		240		285		375		520		600
	Electrial Heating Power	kW	38		42		48		50		70		80		95		100		130		175		220		270		330		390
	Temperature Heating Zone																		7										
	Oil Tank Capacity	L	1,780		1,830		1,880		2,350		2,450		2,800		3,400		3,950		4,250		6,050		7,500		8,750		11,050		12,550
Others	Machine Dimensions(LxWxH)	m	10.6x3.8x3.3		10.7x3.8x3.3		10.8x3.8x3.3		11.6x3.8x3.3		12.2x3.8x3.3		12.3x3.8x3.3		12.7x3.8x3.3		12.7x3.8x3.3		13.7x3.8x3.3		14.6x3.8x3.3		16.1x3.8x3.3		17.5x3.8x3.3		20.0x3.8x3.3		22.0x3.8x3.3
	Machine Weight(Approx.)	ton	55		57		59		70		73		75		77		80		85		90		100		110		120		130

☐ Standard

SM1900TP-SVP/2		J1	J2	K1	K2	N1	N2	P1	P2	Q1	Q2	A1	A2	R1	R2	B1	B2	C1	C2	D1	D2	E1	E2	F1	F2	G1	G2	H
Injection Unit	Shot Weight(PS) g	1,968	2,314	2,604	3,087	3,430	4,322	4,754	5,658	6,172	7,244	7,847	9,101	9,801	11,251	13,180	17,939	21,002	27,431	31,431	39,780	44,843	55,362	61,166	74,011	81,034	96,437	106,081
	Swept Volume cm^3	2,163	2,543	2,861	3,393	3,770	4,749	5,224	6,217	6,782	7,960	8,623	10,001	10,770	12,364	14,483	19,713	23,079	30,144	34,540	43,715	49,278	60,838	67,216	81,331	89,048	105,975	116,573
	Screw Diameter mm	83	90	90	98	98	110	110	120	120	130	130	140	140	150	150	175	175	200	200	225	225	250	250	275	275	300	300
	Injection Pressure(Max.) Mpa	187	159	184	155	184	146	184	155	184	157	180	155	180	157	180	132	160	123	160	126	160	130	160	132	160	134	160
	Injection Stroke mm	400		450		500		550		600		650		700		820		960		1,100		1,240		1,370		1,500		1,650
	Screw Rotation Speed (Max.) rpm	150		140		130		115		110		100		95		95	80	83	69	65	50	60	50	60	47	50	40	40
	Injection Rate cm^3/s	560	658	650	771	720	907	825	982	952	1,117	1,136	1,317	1,296	1,488	1,296	1,764	1,970	2,339	2,122	2,686	2,722	3,360	3,307	4,001	3,268	3,889	2,517
	Screw L/D Ratio	22.0	20.3	22.0	20.2	22.0	19.6	22.0	20.2	22.0	20.3	22.0	20.4	22.0	20.5	22.0	18.9	22.0	19.3	22.0	19.6	22.0	19.8	22.0	20.0	22.0	20.2	22.0
	Nozzle Contact Force ton	15																										
Clamping Unit	Clamping Force(Max.) ton	1,900																										
	Opening Force ton	165																										
	Opening Stroke mm	1,700 - 2,500																										
	Space Between Tie Bar(HxV) mm	1,670 X 1,550																										
	Mould Thickness(Min.-Max.) mm	700 - 1,500																										
	Maximum Daylight mm	3,200																										
	Clamp Closing Speed(Max.) m/min	45																										
	Clamp Opening Speed(Max.) m/min	45																										
	Ejector Force(Max.) ton	45																										
	Ejector Stroke mm	450																										
	Mould Register Hole mm	315																										
Power/Heating Unit	System Pressure kgf/cm^2	175																										
	Servo Motor Power kW	75		85		93		104.5		124.5		142.5		159.5		159.5		195		240		285		375		520		600
	Electrial Heating Power kW	38		42		48		50		70		80		95		100		130		175		220		270		330		390
	Temperature Heating Zone	7																										
	Oil Tank Capacity L	1,800		1,850		1,900		2,400		2,500		2,850		3,450		4,000		4,300		6,100		7,550		8,800		11,000		12,600
Others	Machine Dimensions(LxWxH) m	10.8x4.2x3.5		10.9x4.2x3.5		11.0x4.2x3.5		11.8x4.2x3.5		12.4x4.2x3.5		12.5x4.2x3.5		12.9x4.2x3.5		12.9x4.2x3.5		14.0x4.2x3.5		14.8x4.2x3.5		16.4x4.2x3.5		17.7x4.2x3.5		20.2x4.2x3.5		22.2x4.2x3.5
	Machine Weight(Approx.) ton	60		62		64		75		78		80		82		85		90		95		105		115		125		135

SM2200TP-SVP/2		J1	J2	K1	K2	N1	N2	P1	P2	Q1	Q2	A1	A2	R1	R2	B1	B2	C1	C2	D1	D2	E1	E2	F1	F2	G1	G2	H
Injection Unit	Shot Weight(PS) g	1,968	2,314	2,604	3,087	3,430	4,322	4,754	5,658	6,172	7,244	7,847	9,101	9,801	11,251	13,180	17,939	21,002	27,431	31,431	39,780	44,843	55,362	61,166	74,011	81,034	96,437	106,081
	Swept Volume cm^3	2,163	2,543	2,861	3,393	3,770	4,749	5,224	6,217	6,782	7,960	8,623	10,001	10,770	12,364	14,483	19,713	23,079	30,144	34,540	43,715	49,278	60,838	67,216	81,331	89,048	105,975	116,573
	Screw Diameter mm	83	90	90	98	98	110	110	120	120	130	130	140	140	150	150	175	175	200	200	225	225	250	250	275	275	300	300
	Injection Pressure(Max.) Mpa	187	159	184	155	184	146	184	155	184	157	180	155	180	157	180	132	160	123	160	126	160	130	160	132	160	134	160
	Injection Stroke mm	400		450		500		550		600		650		700		820		960		1,100		1,240		1,370		1,500		1,650
	Screw Rotation Speed (Max.) rpm	150		140		130		115		110		100		95		95	80	83	69	65	50	60	50	60	47	50	40	40
	Injection Rate cm^3/s	560	658	650	771	720	907	825	982	952	1,117	1,136	1,317	1,296	1,488	1,296	1,764	1,970	2,339	2,122	2,686	2,722	3,360	3,307	4,001	3,268	3,889	2,517
	Screw L/D Ratio	22.0	20.3	22.0	20.2	22.0	19.6	22.0	20.2	22.0	20.3	22.0	20.4	22.0	20.5	22.0	18.9	22.0	19.3	22.0	19.6	22.0	19.8	22.0	20.0	22.0	20.2	22.0
	Nozzle Contact Force ton	15																										
Clamping Unit	Clamping Force(Max.) ton	2,200																										
	Opening Force ton	210																										
	Opening Stroke mm	1,600 - 2,500																										
	Space Between Tie Bar(HxV) mm	1,820 X 1,520																										
	Mould Thickness(Min.-Max.) mm	700 - 1,600																										
	Maximum Daylight mm	3,200																										
	Clamp Closing Speed(Max.) m/min	45																										
	Clamp Opening Speed(Max.) m/min	45																										
	Ejector Force(Max.) ton	45																										
	Ejector Stroke mm	450																										
	Mould Register Hole mm	315																										
Power/Heating Unit	System Pressure kgf/cm^2	175																										
	Servo Motor Power kW	75		85		93		104.5		124.5		142.5		159.5		159.5		195		240		285		375		520		600
	Electrial Heating Power kW	38		42		48		50		70		80		95		100		130		175		220		270		330		390
	Temperature Heating Zone	7																										
	Oil Tank Capacity L	1,800		1,850		1,900		2,400		2,500		2,850		3,450		4,000		4,300		6,100		7,550		8,800		11,000		12,600
Others	Machine Dimensions(LxWxH) m	10.8x4.2x3.5		10.9x4.2x3.5		11.0x4.2x3.5		11.8x4.2x3.5		12.4x4.2x3.5		12.5x4.2x3.5		12.9x4.2x3.5		12.9x4.2x3.5		14.0x4.2x3.5		14.8x4.2x3.5		16.4x4.2x3.5		17.7x4.2x3.5		20.2x4.2x3.5		22.2x4.2x3.5
	Machine Weight(Approx.) ton	65		67		69		80		83		85		87		90		95		100		110		120		130		140

*The technical parameters above are for reference only and discrepancies may arise in different circumstances. The company keeps upgrading the products and reserves the right to change the product specifications and parameters without prior notice. The final interpretation to the above specifications and parameters belongs to the company.

	SM2600TP-SVP/2		J1	J2	K1	K2	N1	N2	P1	P2	Q1	Q2	A1	A2	R1	R2	B1	B2	C1	C2	D1	D2	E1	E2	F1	F2	G1	G2	H
Injection Unit	Shot Weight(PS)	g	1,968	2,314	2,604	3,087	3,430	4,322	4,754	5,658	6,172	7,244	7,847	9,101	9,801	11,251	13,180	17,939	21,002	27,431	31,431	39,780	44,843	55,362	61,166	74,011	81,034	96,437	106,081
	Swept Volume	cm³	2,163	2,543	2,861	3,393	3,770	4,749	5,224	6,217	6,782	7,960	8,623	10,001	10,770	12,364	14,483	19,713	23,079	30,144	34,540	43,715	49,278	60,838	67,216	81,331	89,048	105,975	116,573
	Screw Diameter	mm	83	90	90	98	98	110	110	120	120	130	130	140	140	150	150	175	175	200	200	225	225	250	250	275	275	300	300
	Injection Pressure(Max.)	Mpa	187	159	184	155	184	146	184	155	184	157	180	155	180	157	180	132	160	123	160	126	160	130	160	132	160	134	160
	Injection Stroke	mm	400		450		500		550		600		650		700		820		960		1,100		1,240		1,370		1,500		1,650
	Screw Rotation Speed (Max.)	rpm	150		140		130		115		110		100		95		95	80	83	69	65	50	60	50	60	47	50	40	40
	Injection Rate	cm³/s	560	658	650	771	720	907	825	982	952	1,117	1,136	1,317	1,296	1,488	1,296	1,764	1,970	2,339	2,122	2,686	2,722	3,360	3,307	4,001	3,268	3,889	2,517
	Screw L/D Ratio		22.0	20.3	22.0	20.2	22.0	19.6	22.0	20.2	22.0	20.3	22.0	20.4	22.0	20.5	22.0	18.9	22.0	19.3	22.0	19.6	22.0	19.8	22.0	20.0	22.0	20.2	22.0
	Nozzle Contact Force	ton	15																										
Clamping Unit	Clamping Force(Max.)	ton	2,600																										
	Opening Force	ton	210																										
	Opening Stroke	mm	1,900 - 2,800																										
	Space Between Tie Bar(HxV)	mm	1,930 X 1,730																										
	Mould Thickness(Min.-Max.)	mm	800 - 1,700																										
	Maximum Daylight	mm	3,600																										
	Clamp Closing Speed(Max.)	m/min	45																										
	Clamp Opening Speed(Max.)	m/min	45																										
	Ejector Force(Max.)	ton	45																										
	Ejector Stroke	mm	500																										
	Mould Register Hole	mm	315																										
Power/Heating Unit	System Pressure	kgf/cm²	175																										
	Servo Motor Power	kW	75		85		93		104.5		124.5		142.5		159.5		159.5		195		240		285		375		520		600
	Electrial Heating Power	kW	38		42		48		50		70		80		95		100		130		175		220		270		330		390
	Temperature Heating Zone																		7										
	Oil Tank Capacity	L	1,850		1,900		1,950		2,450		2,550		2,900		3,500		4,050		4,350		6,150		7,600		8,850		11,150		12,650
Others	Machine Dimensions(LxWxH)	m	11.5x4.4x3.7		11.6x4.4x3.7		11.7x4.4x3.7		12.5x4.4x3.7		13.1x4.4x3.7		13.2x4.4x3.7		13.6x4.4x3.7		13.6x4.4x3.7		14.6x4.4x3.7		15.5x4.4x3.7		17.0x4.4x3.7		18.4x4.4x3.7		20.8x4.4x3.7		20.9x4.4x3.7
	Machine Weight(Approx.)	ton	85		87		89		100		103		105		107		110		115		120		130		140		150		160

	SM3000TP-SVP/2		J1	J2	K1	K2	N1	N2	P1	P2	Q1	Q2	A1	A2	R1	R2	B1	B2	C1	C2	D1	D2	E1	E2	F1	F2	G1	G2	H
Injection Unit	Shot Weight(PS)	g	1,968	2,314	2,604	3,087	3,430	4,322	4,754	5,658	6,172	7,244	7,847	9,101	9,801	11,251	13,180	17,939	21,002	27,431	31,431	39,780	44,843	55,362	61,166	74,011	81,034	96,437	106,081
	Swept Volume	cm³	2,163	2,543	2,861	3,393	3,770	4,749	5,224	6,217	6,782	7,960	8,623	10,001	10,770	12,364	14,483	19,713	23,079	30,144	34,540	43,715	49,278	60,838	67,216	81,331	89,048	105,975	116,573
	Screw Diameter	mm	83	90	90	98	98	110	110	120	120	130	130	140	140	150	150	175	175	200	200	225	225	250	250	275	275	300	300
	Injection Pressure(Max.)	Mpa	187	159	184	155	184	146	184	155	184	157	180	155	180	157	180	132	160	123	160	126	160	130	160	132	160	134	160
	Injection Stroke	mm	400		450		500		550		600		650		700		820		960		1,100		1,240		1,370		1,500		1,650
	Screw Rotation Speed (Max.)	rpm	150		140		130		115		110		100		95		95	80	83	69	65	50	60	50	60	47	50	40	40
	Injection Rate	cm³/s	560	658	650	771	720	907	825	982	952	1,117	1,136	1,317	1,296	1,488	1,296	1,764	1,970	2,339	2,122	2,686	2,722	3,360	3,307	4,001	3,268	3,889	2,517
	Screw L/D Ratio		22.0	20.3	22.0	20.2	22.0	19.6	22.0	20.2	22.0	20.3	22.0	20.4	22.0	20.5	22.0	18.9	22.0	19.3	22.0	19.6	22.0	19.8	22.0	20.0	22.0	20.2	22.0
	Nozzle Contact Force	ton	15																										
Clamping Unit	Clamping Force(Max.)	ton	3,000																										
	Opening Force	ton	300																										
	Opening Stroke	mm	2,100 - 3,000																										
	Space Between Tie Bar(HxV)	mm	2,020 X 1,820																										
	Mould Thickness(Min.-Max.)	mm	900 - 1,800																										
	Maximum Daylight	mm	3,900																										
	Clamp Closing Speed(Max.)	m/min	45																										
	Clamp Opening Speed(Max.)	m/min	45																										
	Ejector Force(Max.)	ton	45																										
	Ejector Stroke	mm	500																										
	Mould Register Hole	mm	315																										
Power/Heating Unit	System Pressure	kgf/cm²	175																										
	Servo Motor Power	kW	75		85		93		104.5		124.5		142.5		159.5		159.5		195		240		285		375		520		600
	Electrial Heating Power	kW	38		42		48		50		70		80		95		100		130		175		220		270		330		390
	Temperature Heating Zone																		7										
	Oil Tank Capacity	L	1,900		1,950		2,000		2,500		2,600		2,950		3,550		4,100		4,400		6,200		7,650		8,900		11,200		12,700
Others	Machine Dimensions(LxWxH)	m	11.9x5.0x4		12.0x5.0x4		12.1x5.0x4		12.9x5.0x4		13.6x5.0x4		13.7x5.0x4		14.1x5.0x4		14.1x5.0x4		15.1x5.0x4		16.0x5.0x4		17.5x5.0x4		18.9x5.0x4		21.3x5.0x4		23.3x5.0x4
	Machine Weight(Approx.)	ton	105		107		109		120		123		125		127		130		135		140		150		160		170		180

Standard

SM3600TP-SVP/2		J1	J2	K1	K2	N1	N2	P1	P2	Q1	Q2	A1	A2	R1	R2	B1	B2	C1	C2	D1	D2	E1	E2	F1	F2	G1	G2	H
Injection Unit	Shot Weight(PS)	g	1,968	2,314	2,604	3,087	3,430	4,322	4,754	5,658	6,172	7,244	7,847	9,101	9,801	11,251	13,180	17,939	21,002	27,431	31,431	39,780	44,843	55,362	61,166	74,011	81,034	96,437	106,081
	Swept Volume	cm³	2,163	2,543	2,861	3,393	3,770	4,749	5,224	6,217	6,782	7,960	8,623	10,001	10,770	12,364	14,483	19,713	23,079	30,144	34,540	43,715	49,278	60,838	67,216	81,331	89,048	105,975	116,573
	Screw Diameter	mm	83	90	90	98	98	110	110	120	120	130	130	140	140	150	150	175	175	200	200	225	225	250	250	275	275	300	300
	Injection Pressure(Max.)	Mpa	187	159	184	155	184	146	184	155	184	157	180	155	180	157	180	132	160	123	160	126	160	130	160	132	160	134	160
	Injection Stroke	mm	400		450		500		550		600		650		700		820		960		1,100		1,240		1,370		1,500		1,650
	Screw Rotation Speed (Max.)	rpm	150		140		130		115		110		100		95		95	80	83	69	65	50	60	50	60	47	50	40	40
	Injection Rate	cm³/s	560	658	650	771	720	907	825	982	952	1,117	1,136	1,317	1,296	1,488	1,296	1,764	1,970	2,339	2,122	2,686	2,722	3,360	3,307	4,001	3,268	3,889	2,517
	Screw L/D Ratio		22.0	20.3	22.0	20.2	22.0	19.6	22.0	20.2	22.0	20.3	22.0	20.4	22.0	20.5	22.0	18.9	22.0	19.3	22.0	19.6	22.0	19.8	22.0	20.0	22.0	20.2	22.0
	Nozzle Contact Force	ton	15																										
Clamping Unit	Clamping Force(Max.)	ton	3,600																										
	Opening Force	ton	300																										
	Opening Stroke	mm	2,200 - 3,200																										
	Space Between Tie Bar(HxV)	mm	2,170 X 1,920																										
	Mould Thickness(Min.-Max.)	mm	1,000 - 2,000																										
	Maximum Daylight	mm	4,200																										
	Clamp Closing Speed(Max.)	m/min	45																										
	Clamp Opening Speed(Max.)	m/min	45																										
	Ejector Force(Max.)	ton	55																										
	Ejector Stroke	mm	550																										
	Mould Register Hole	mm	315																										
Power/ Heating Unit	System Pressure	kgf/cm²	175																										
	Servo Motor Power	kW	75		85		93		104.5		124.5		142.5		159.5		159.5		195		240		285		375		520		600
	Electrial Heating Power	kW	38		42		48		50		70		80		95		100		130		175		220		270		330		390
	Temperature Heating Zone		7																										
	Oil Tank Capacity	L	1,950		2,000		2,050		2,550		2,650		3,000		3,600		4,150		4,450		6,250		7,700		8,950		11,250		12,750
Others	Machine Dimensions(LxWxH)	m	12.4x5.3x4.2		12.5x5.3x4.2		12.6x5.3x4.2		13.5x5.3x4.2		14.0x5.3x4.2		14.2x5.3x4.2		14.5x5.3x4.2		14.5x5.3x4.2		15.6x5.3x4.2		16.5x5.3x4.2		18.0x5.3x4.2		19.4x5.3x4.2		21.8x5.3x4.2		23.8x5.3x4.2
	Machine Weight(Approx.)	ton	135		137		139		150		153		155		157		160		165		170		180		190		200		210

SM4500TP-SVP/2		J1	J2	K1	K2	N1	N2	P1	P2	Q1	Q2	A1	A2	R1	R2	B1	B2	C1	C2	D1	D2	E1	E2	F1	F2	G1	G2	H
Injection Unit	Shot Weight(PS)	g	1,968	2,314	2,604	3,087	3,430	4,322	4,754	5,658	6,172	7,244	7,847	9,101	9,801	11,251	13,180	17,939	21,002	27,431	31,431	39,780	44,843	55,362	61,166	74,011	81,034	96,437	106,081
	Swept Volume	cm³	2,163	2,543	2,861	3,393	3,770	4,749	5,224	6,217	6,782	7,960	8,623	10,001	10,770	12,364	14,483	19,713	23,079	30,144	34,540	43,715	49,278	60,838	67,216	81,331	89,048	105,975	116,573
	Screw Diameter	mm	83	90	90	98	98	110	110	120	120	130	130	140	140	150	150	175	175	200	200	225	225	250	250	275	275	300	300
	Injection Pressure(Max.)	Mpa	187	159	184	155	184	146	184	155	184	157	180	155	180	157	180	132	160	123	160	126	160	130	160	132	160	134	160
	Injection Stroke	mm	400		450		500		550		600		650		700		820		960		1,100		1,240		1,370		1,500		1,650
	Screw Rotation Speed (Max.)	rpm	150		140		130		115		110		100		95		95	80	83	69	65	50	60	50	60	47	50	40	40
	Injection Rate	cm³/s	560	658	650	771	720	907	825	982	952	1,117	1,136	1,317	1,296	1,488	1,296	1,764	1,970	2,339	2,122	2,686	2,722	3,360	3,307	4,001	3,268	3,889	2,517
	Screw L/D Ratio		22.0	20.3	22.0	20.2	22.0	19.6	22.0	20.2	22.0	20.3	22.0	20.4	22.0	20.5	22.0	18.9	22.0	19.3	22.0	19.6	22.0	19.8	22.0	20.0	22.0	20.2	22.0
	Nozzle Contact Force	ton	15																										
Clamping Unit	Clamping Force(Max.)	ton	4,500																										
	Opening Force	ton	300																										
	Opening Stroke	mm	2,300 - 3,400																										
	Space Between Tie Bar(HxV)	mm	2,430 X 2,100																										
	Mould Thickness(Min.-Max.)	mm	1,100 - 2,200																										
	Maximum Daylight	mm	4,500																										
	Clamp Closing Speed(Max.)	m/min	45																										
	Clamp Opening Speed(Max.)	m/min	45																										
	Ejector Force(Max.)	ton	55																										
	Ejector Stroke	mm	550																										
	Mould Register Hole	mm	315																										
Power/ Heating Unit	System Pressure	kgf/cm²	175																										
	Servo Motor Power	kW	75		85		93		104.5		124.5		142.5		159.5		159.5		195		240		285		375		520		600
	Electrial Heating Power	kW	38		42		48		50		70		80		95		100		130		175		220		270		330		390
	Temperature Heating Zone		7																										
	Oil Tank Capacity	L	2,100		2,150		2,200		2,700		2,800		3,150		3,750		4,300		4,600		6,400		7,850		9,100		11,400		12,900
Others	Machine Dimensions(LxWxH)	m	13.0x5.9x4.4		13.1x5.9x4.4		13.2x5.9x4.4		14.0x5.9x4.4		14.6x5.9x4.4		14.7x5.9x4.4		15.1x5.9x4.4		15.1x5.9x4.4		16.1x5.9x4.4		17x5.9x4.4		18.6x5.9x4.4		20x5.9x4.4		22.4x5.9x4.4		24.4x5.9x4.4
	Machine Weight(Approx.)	ton	165		167		169		180		183		185		187		190		195		200		210		220		230		240

*The technical parameters above are for reference only and discrepancies may arise in different circumstances. The company keeps upgrading the products and reserves the right to change the product specifications and parameters without prior notice. The final interpretation to the above specifications and parameters belongs to the company.

	SM5500TP-SVP/2		J1	J2	K1	K2	N1	N2	P1	P2	Q1	Q2	A1	A2	R1	R2	B1	B2	C1	C2	D1	D2	E1	E2	F1	F2	G1	G2	H
Injection Unit	Shot Weight(PS)	g	1,968	2,314	2,604	3,087	3,430	4,322	4,754	5,658	6,172	7,244	7,847	9,101	9,801	11,251	13,180	17,939	21,002	27,431	31,431	39,780	44,843	55,362	61,166	74,011	81,034	96,437	106,081
	Swept Volume	cm³	2,163	2,543	2,861	3,393	3,770	4,749	5,224	6,217	6,782	7,960	8,623	10,001	10,770	12,364	14,483	19,713	23,079	30,144	34,540	43,715	49,278	60,838	67,216	81,331	89,048	105,975	116,573
	Screw Diameter	mm	83	90	90	98	98	110	110	120	120	130	130	140	140	150	150	175	175	200	200	225	225	250	250	275	275	300	300
	Injection Pressure(Max.)	Mpa	187	159	184	155	184	146	184	155	184	157	180	155	180	157	180	132	160	123	160	126	160	130	160	132	160	134	160
	Injection Stroke	mm	400		450		500		550		600		650		700		820		960		1,100		1,240		1,370		1,500		1,650
		rpm	150		140		130		115		110		100		95		95	80	83	69	65	50	60	50	60	47	50	40	40
	Injection Rate	cm³/s	560	658	650	771	720	907	825	982	952	1,117	1,136	1,317	1,296	1,488	1,296	1,764	1,970	2,339	2,122	2,686	2,722	3,360	3,307	4,001	3,268	3,889	2,517
	Screw L/D Ratio		22.0	20.3	22.0	20.2	22.0	19.6	22.0	20.2	22.0	20.3	22.0	20.4	22.0	20.5	22.0	18.9	22.0	19.3	22.0	19.6	22.0	19.8	22.0	20.0	22.0	20.2	22.0
	Nozzle Contact Force	ton	15																										
Clamping Unit	Clamping Force(Max.)	ton	5,500																										
	Opening Force	ton	400																										
	Opening Stroke	mm	2,600 - 3,800																										
	Space Between Tie Bar(HxV)	mm	2,620 X 2,260																										
	Mould Thickness(Min.-Max.)	mm	1,200 - 2,400																										
	Maximum Daylight	mm	5,000																										
	Clamp Closing Speed(Max.)	m/min	45																										
	Clamp Opening Speed(Max.)	m/min	45																										
	Ejector Force(Max.)	ton	80																										
	Ejector Stroke	mm	650																										
	Mould Register Hole	mm	315																										
Power/Heating Unit	System Pressure	kgf/cm²	175																										
	Servo Motor Power	kW	75		85		93		104.5		124.5		142.5		159.5		159.5		195		240		285		375		520		600
	Electrial Heating Power	kW	38		42		48		50		70		80		95		100		130		175		220		270		330		390
	Temperature Heating Zone		7																										
	Oil Tank Capacity	L	2,300		2,350		2,400		2,850		2,950		3,300		3,900		4,450		4,750		6,550		8,000		9,250		11,500		13,050
Others	Machine Dimensions(LxWxH)	m	13.5x6.1x4.6		13.6x6.1x4.6		13.7x6.1x4.6		14.5x6.1x4.6		15.1x6.1x4.6		15.2x6.1x4.6		15.6x6.1x4.6		15.6x6.1x4.6		16.6x6.1x4.6		17.5x6.1x4.6		19.0x6.1x4.6		20.4x6.1x4.6		22.9x6.1x4.6		24.9x6.1x4.6
	Machine Weight(Approx.)	ton	195		197		199		210		213		215		217		220		225		230		240		250		260		270

	SM6500TP-SVP/2		J1	J2	K1	K2	N1	N2	P1	P2	Q1	Q2	A1	A2	R1	R2	B1	B2	C1	C2	D1	D2	E1	E2	F1	F2	G1	G2	H
Injection Unit	Shot Weight(PS)	g	1,968	2,314	2,604	3,087	3,430	4,322	4,754	5,658	6,172	7,244	7,847	9,101	9,801	11,251	13,180	17,939	21,002	27,431	31,431	39,780	44,843	55,362	61,166	74,011	81,034	96,437	106,081
	Swept Volume	cm³	2,163	2,543	2,861	3,393	3,770	4,749	5,224	6,217	6,782	7,960	8,623	10,001	10,770	12,364	14,483	19,713	23,079	30,144	34,540	43,715	49,278	60,838	67,216	81,331	89,048	105,975	116,573
	Screw Diameter	mm	83	90	90	98	98	110	110	120	120	130	130	140	140	150	150	175	175	200	200	225	225	250	250	275	275	300	300
	Injection Pressure(Max.)	Mpa	187	159	184	155	184	146	184	155	184	157	180	155	180	157	180	132	160	123	160	126	160	130	160	132	160	134	160
	Injection Stroke	mm	400		450		500		550		600		650		700		820		960		1,100		1,240		1,370		1,500		1,650
		rpm	150		140		130		115		110		100		95		95	80	83	69	65	50	60	50	60	47	50	40	40
	Injection Rate	cm³/s	560	658	650	771	720	907	825	982	952	1,117	1,136	1,317	1,296	1,488	1,296	1,764	1,970	2,339	2,122	2,686	2,722	3,360	3,307	4,001	3,268	3,889	2,517
	Screw L/D Ratio		22.0	20.3	22.0	20.2	22.0	19.6	22.0	20.2	22.0	20.3	22.0	20.4	22.0	20.5	22.0	18.9	22.0	19.3	22.0	19.6	22.0	19.8	22.0	20.0	22.0	20.2	22.0
	Nozzle Contact Force	ton	15																										
Clamping Unit	Clamping Force(Max.)	ton	6,500																										
	Opening Force	ton	400																										
	Opening Stroke	mm	2,700 - 3,900																										
	Space Between Tie Bar(HxV)	mm	2,760 X 2,400																										
	Mould Thickness(Min.-Max.)	mm	1,300 - 2,500																										
	Maximum Daylight	mm	5,200																										
	Clamp Closing Speed(Max.)	m/min	45																										
	Clamp Opening Speed(Max.)	m/min	45																										
	Ejector Force(Max.)	ton	80																										
	Ejector Stroke	mm	650																										
	Mould Register Hole	mm	315																										
Power/Heating Unit	System Pressure	kgf/cm²	175																										
	Servo Motor Power	kW	75		85		93		104.5		124.5		142.5		159.5		159.5		195		240		285		375		520		600
	Electrial Heating Power	kW	38		42		48		50		70		80		95		100		130		175		220		270		330		390
	Temperature Heating Zone		7																										
	Oil Tank Capacity	L	2,400		2,450		2,500		2,950		3,050		3,400		4,000		4,550		4,850		6,650		8,100		9,350		11,650		13,150
Others	Machine Dimensions(LxWxH)	m	14.1x6.4x4.8		14.2x6.4x4.8		14.3x6.4x4.8		15.1x6.4x4.8		15.7x6.4x4.8		15.8x6.4x4.8		16.2x6.4x4.8		16.2x6.4x4.8		17.2x6.4x4.8		18.1x6.4x4.8		19.6x6.4x4.8		21.0x6.4x4.8		23.5x6.4x4.8		25.4x6.4x4.8
	Machine Weight(Approx.)	ton	225		227		229		235		238		240		242		245		250		255		265		275		285		300

☐ Standard

SM700TP-SVP/2

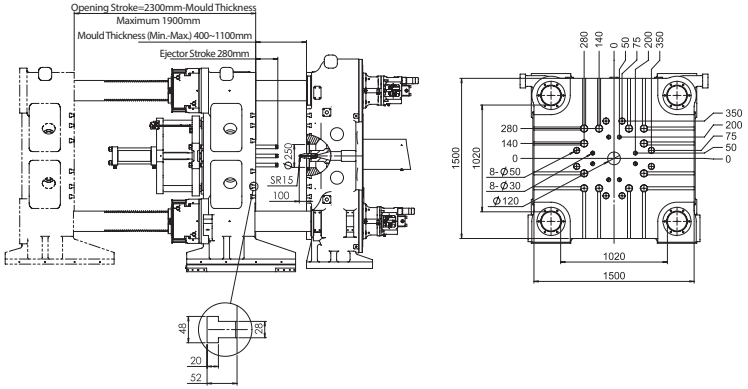

SM1250TP-SVP/2

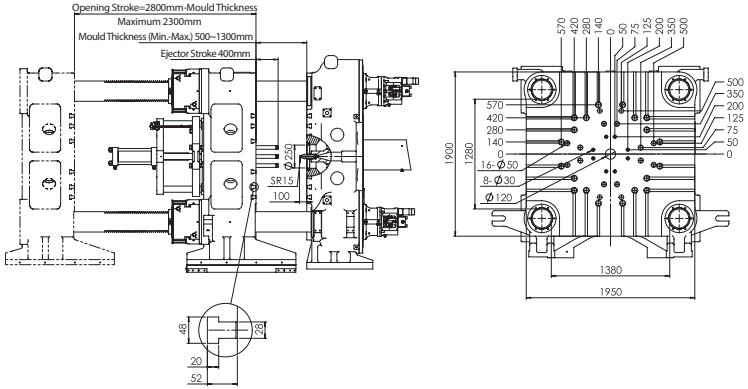

SM850TP-SVP/2

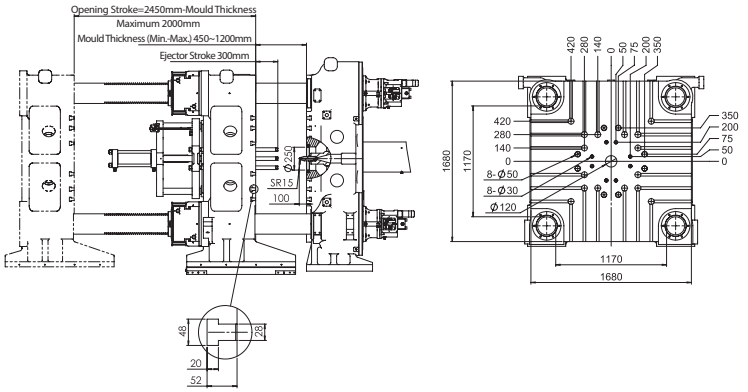

SM1450TP-SVP/2

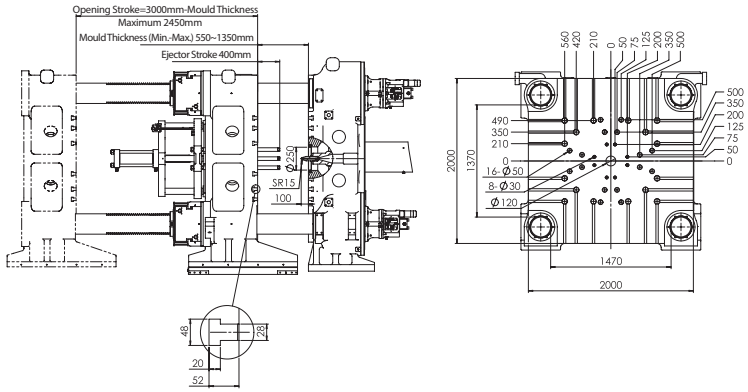

SM1050TP-SVP/2

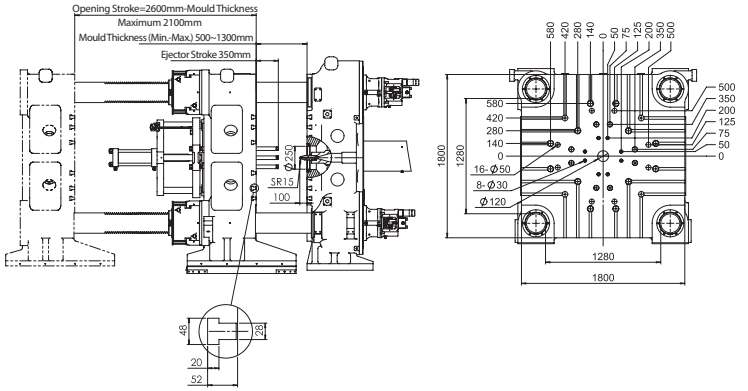

SM1650TP-SVP/2

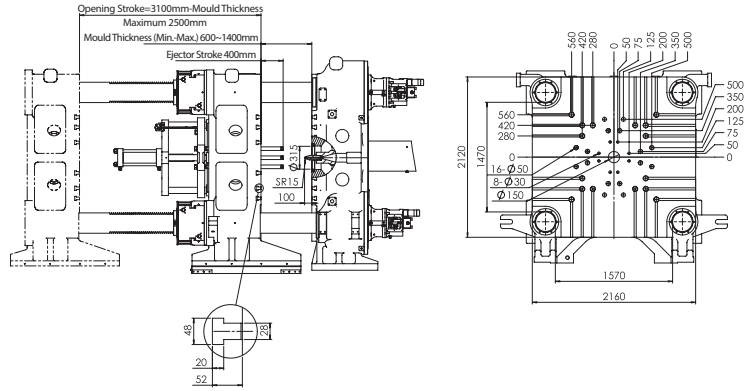

*The technical parameters above are for reference only and discrepancies may arise in different circumstances. The company keeps upgrading the products and reserves the right to change the product specifications and parameters without prior notice. The final interpretation to the above specifications and parameters belongs to the company.

SM1900TP-SVP/2

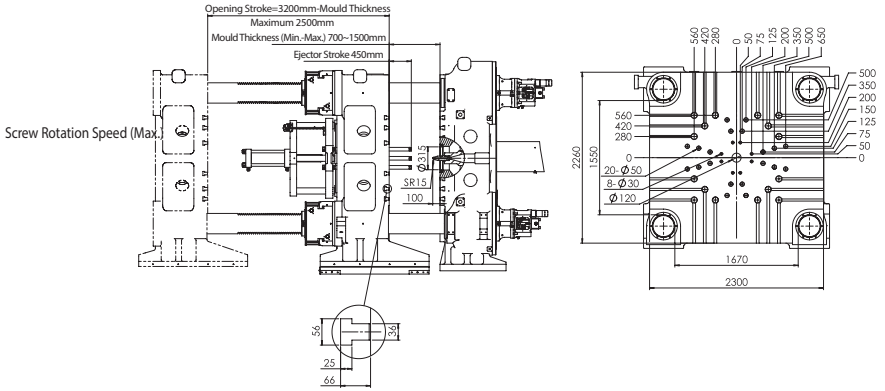

SM2200TP-SVP/2

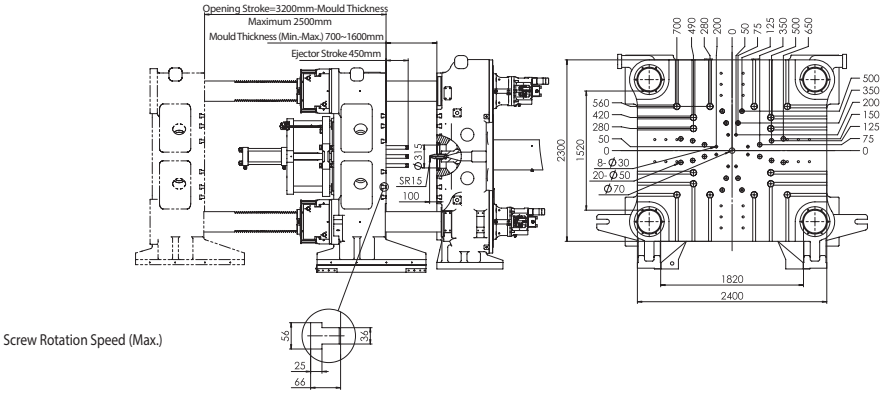

SM2600TP-SVP/2

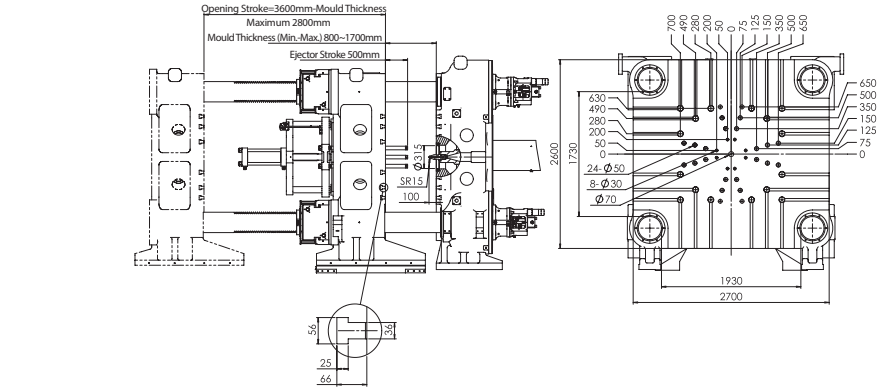

SM3000TP-SVP/2

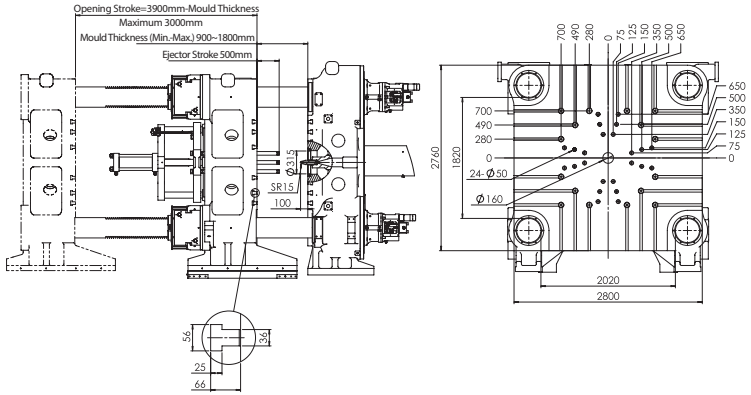

SM3600TP-SVP/2

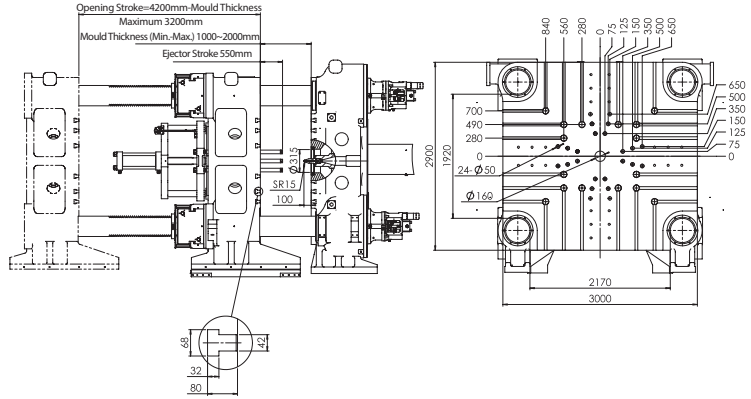

SM4500TP-SVP/2

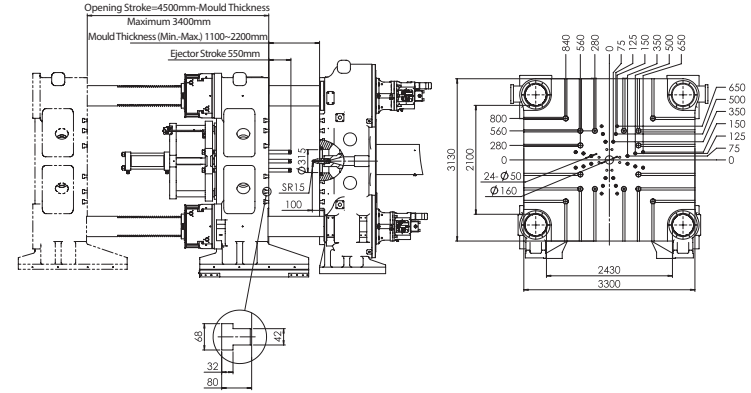

SM5500TP-SVP/2

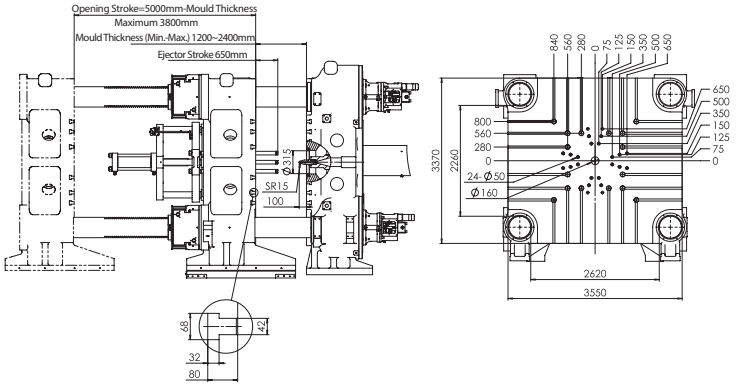

SM6500TP-SVP/2

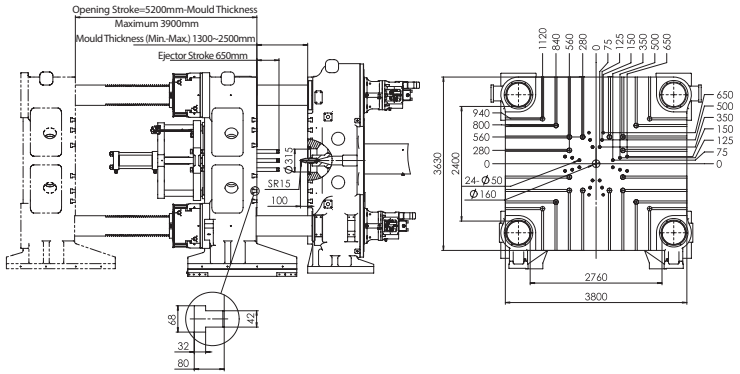

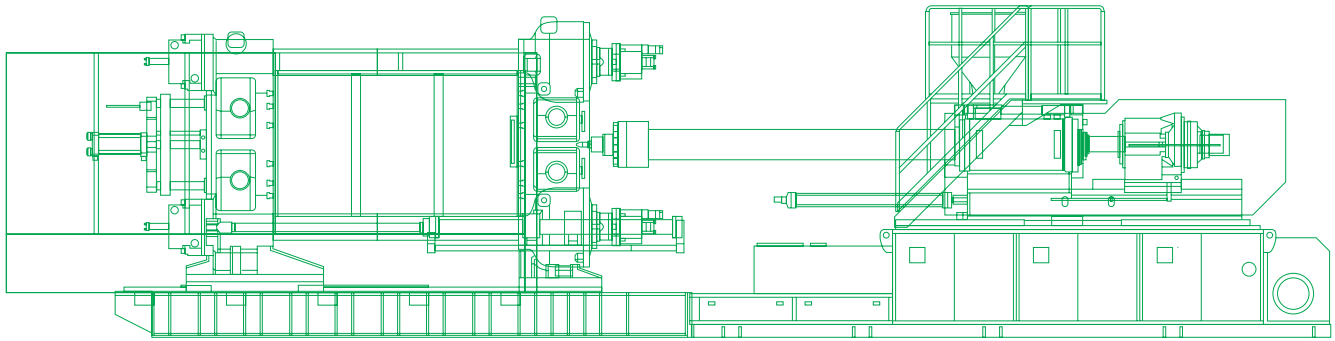

*The technical parameters above are for reference only and discrepancies may arise in different circumstances. The company keeps upgrading the products and reserves the right to change the product specifications and parameters without prior notice. The final interpretation to the above specifications and parameters belongs to the company.

The Chen Hsong Group

Hong Kong	13-15, Dai Wang Street, Tai Po Industrial Estate, Tai Po, HK	Tel: (852) 2665 3222	Fax: (852) 2664 1115
Shenzhen	No. 31-48, Renmin Zhong Road, Kengzi Pingshan District, Shenzhen, China	Tel: (86-755) 8413 9999	Fax: (86-755) 8413 8750
Shunde	Daliang Honggang District, Shunde, Foshan, Guangdong, China	Tel: (86-757) 2233 8666	Fax: (86-757) 2233 8566
Ningbo	No. 28 Yongjiang Road, Dagang Industry Area, Beilun, Ningbo, China	Tel: (86-574) 8683-2888	Fax: (86-574) 8683 5550
Taiwan	No. 1 Sung Chiang North Road, Chung Li Industrial District, Chung Li, Taoyuan, Taiwan, R.O.C.	Tel: (886) 3-452-2288	Fax: (886) 3-452-0261

website : **www.chenhsong.com** e-mail : **marketing@chenhsong.com**

201307